ACME ELECTRIC ROBOT CO.

Box 18093 Austin, TX 78760

(512) 451-5874

DEALER PRICE LIST

1 February, 1985

Part Number	List Price	Dealer Price (minimum order 4)
FD-68 (T/S 2068) (Floppy disc interface)	199	149
FD-ZX (ZX81 / TS1000 / TS1500) (Floppy disc interface)	179	144
CP-68 (TS2068) (Centronics parallel printer)	69	40
CP-ZX (ZX81 / TS1000 / TS1500) (Centronics parallel printer)	99	79
RGB-68 (TS2068) (RGB monitor bd)	45	35
Disc Drive (400 Kilobyte) (5" / DD / DS / 6mS)	79 ~~99~~	49 ~~79~~
Power supply & dual drive case (5v / 12v / computer pwr)	99	89
RS-232C (all models) (Dual RS-232 serial)	99	79
RB-ZX (ZX-81 / TS1000 / TS1500) (Auto set RAMTOP / boot disc)	59	45
16AD12 (16 channel 12 bit A-D converter card, STD Bus)	269	239
SB-BP8 (STD Bus backplane, 8 slots)	99	79

AERCO
ACME ELECTRIC ROBOT CO.
Box 18093 Austin, TX 78760
(512) 451-5874

MODULAR INTERFACE FOR TSC COMPUTERS

DUAL RS-232 SERIAL INTERFACE
TS1000, TS1500, TS2068

The RS-232 interface is used to communicate with peripheral devices such as Printers and Modems as well as other computers. This is a dual channel board so it can communicate with 2 separate RS-232 devices at 2 independent baud rates. It has on-board crystal controlled baud rate generators with software selectable rates of 50 to 19,200 Baud. It can be used with tape or disc based software or it can have mounted directly to it an EPROM board to provide control firmware directly from Power-On. It plugs directly on to the back of the computer and has a feed-through connector.

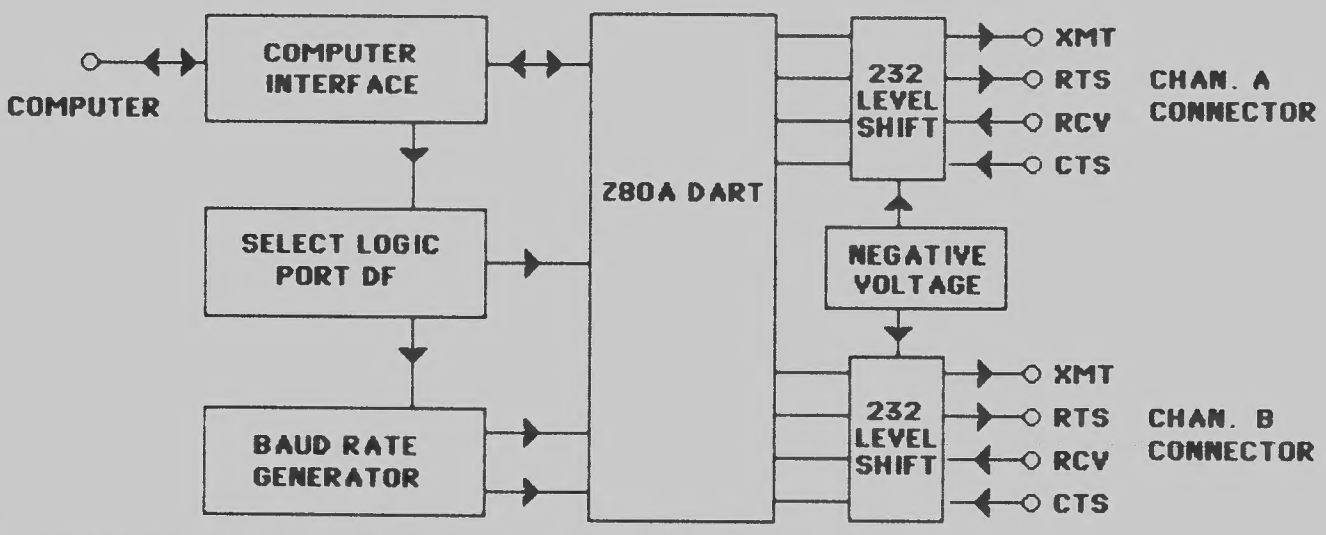

☐ INTERFACE WITH CABLE FOR 1 DEVICE $89

☐ INTERFACE WITH CABLE FOR 2 DEVICES $99

☐ BUILT IN EPROM BOARD WITH FIRMWARE ADD $49

☐ ZX81/TS1000 ☐ TS1500 ☐ TS2068

Please add $3 for shipping.

C.O.D. add $3

VISA / MC add 5%

NAME _____

ADDRESS _____

CITY _____ STATE _____ ZIP _____

§§§

CENTRONICS PRINTER INTERFACE

FOR TS 2068 $69.95 + $3 S&H

*All cables included

*Printer driver software cassette included

*Supports LLIST, LPRINT, and COPY commands

§§§

C. ITOH PROWRITER 8510 AP PRINTER
FOR ALL MODELS TS $375 + $10 S&H

*Full width DOT MATRIX printer

*Full graphics capability

*120 characters per second

*Biderectional printing

*Greek and other character sets built in

*Includes tractor feed and plain paper feed

*THIS PAGE PRINTED ON PROWRITER

§§§

RGB MONITOR INTERFACE

FOR TS 2068 $45 + $3 S&H

(without video cable)

*Obtain maximum resolution from the color computer

*Video cable $20 Specify make & model monitor

* *

CENTRONICS PRINTER INTERFACE
FOR TS 1000 & ZX81 $99 + $3 S&H

*All cccables included

*On board EPROM contains ASCII conversion

*Automatically sets RAMTOP, up to 64K

*Automatically boots AERCO DISC SYSTEM on power up

*Supports LLIST, LPRINT, and COPY commands

*4ft ribbon cable to printer

****

ROM BOARD
FOR TS1000 & ZX81 $59 + $3 S&H

*Automatically sets system RAMTOP, up to 64K

*Automatically boots AERCO DISC SYSTEM on reset

*Specify printer interface ☐AERCO ☐MEMOTECH ☐2040 ☐NONE

****

DIRECT VIDEO MODIFICATION
FOR TS 1000, 1500 & ZX81 $15 + $3 S&H

*A small circuit board that installs inside the computer and sends clean, sharp video to a standard computer monitor. It does not disable the normal TV output nor does it invert the video. Requires soldering 3 wires inside the computer.

*Complete instructions are included.

****

TS 2068 DISC SYSTEM

FD-68 INTERFACE

Controls 1-4 drives

3 inch to 8 inch drives
Shugart compatible

Single or double sided

40/80 tracks per side

64K RAM (256K opt.)
& 8K ROM on board

RGB monitor output

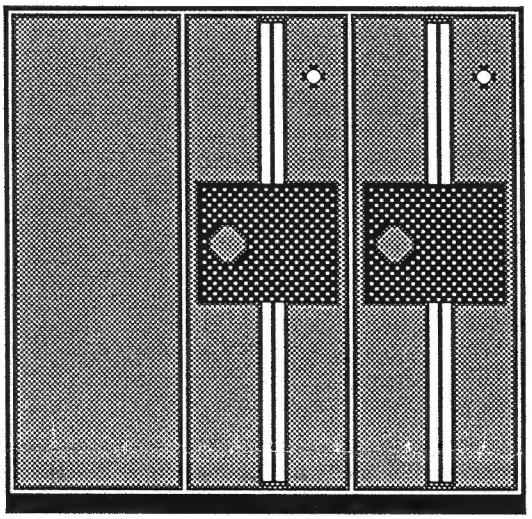

SYSTEM COMPONENTS

$199 FD-68 Interface

$99 Drive 40T/DS/DD
5 inch/400 kilobyte

$99 Dual Drive Cabinet
and 5 amp Pwr Pack

$3 Per Item S&H

Texas Residents add 6%

VISA/MasterCard add 5%

Enhance the performance of your TS 2068 with the **AERCO** Disc System. All of the speed and convienience of a full-out floppy disc system. Save, load and copy programs at the industry standard of 250,000 bits/sec. Fully compatible with all Shugart type drives, including those already in use with the **AERCO** 1000 Disc System. The 64K of on-board RAM can be used as a second bank of system memory or for a full-blown CP/M System (version 2.2). The RGB output is crystal clear and rock steady. The power supply is a 5-amp high efficiency switcher. We offer a variety of other hardware for all models of sinclair-TIMEX.

NOW AVAILABLE: 256K UPGRADE $50 (2-drive max) $80 (4-drive max)

	TS/2068	TS/1000-1500
Floppy Disc Interface	$199	$179
Disc Drives	from ~~99~~ 79	from ~~99~~ 79
Power Supplies	99	99
Centronics Printer I/O	69	99
Dual RS-232C Serial I/O	99	99
C ITOH 8510 Printer	375	375
C ITOH 7500 Printer	275	275
ROM Bd. with Auto Disc Boot	n/a	59
RGB Cable (specify monitor)	30	n/a
CP/M (V. 2.2)	25	n/a

AERCO
ACME ELECTRIC ROBOT CO

Box 18093 Austin TX 78760
Ph (512) 451-5874

ACME ELECTRIC ROBOT CO.
Box 18093, Austin TX 78760 Ph.(512) 451-5874

FD-68 Floppy Disc Interface

64K RAM
8K ROM
RGB OUTPUT
COMPACT SIZE
250K bits/sec

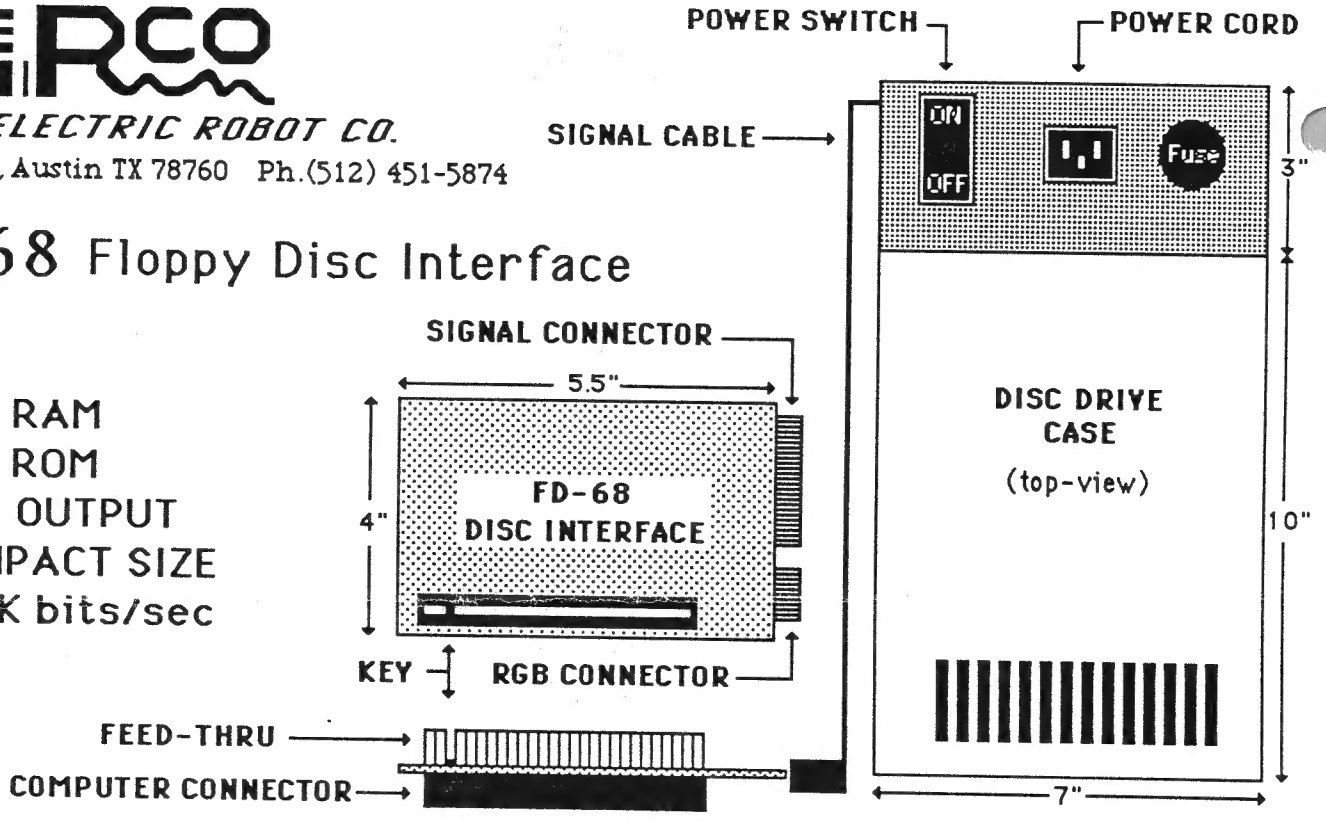

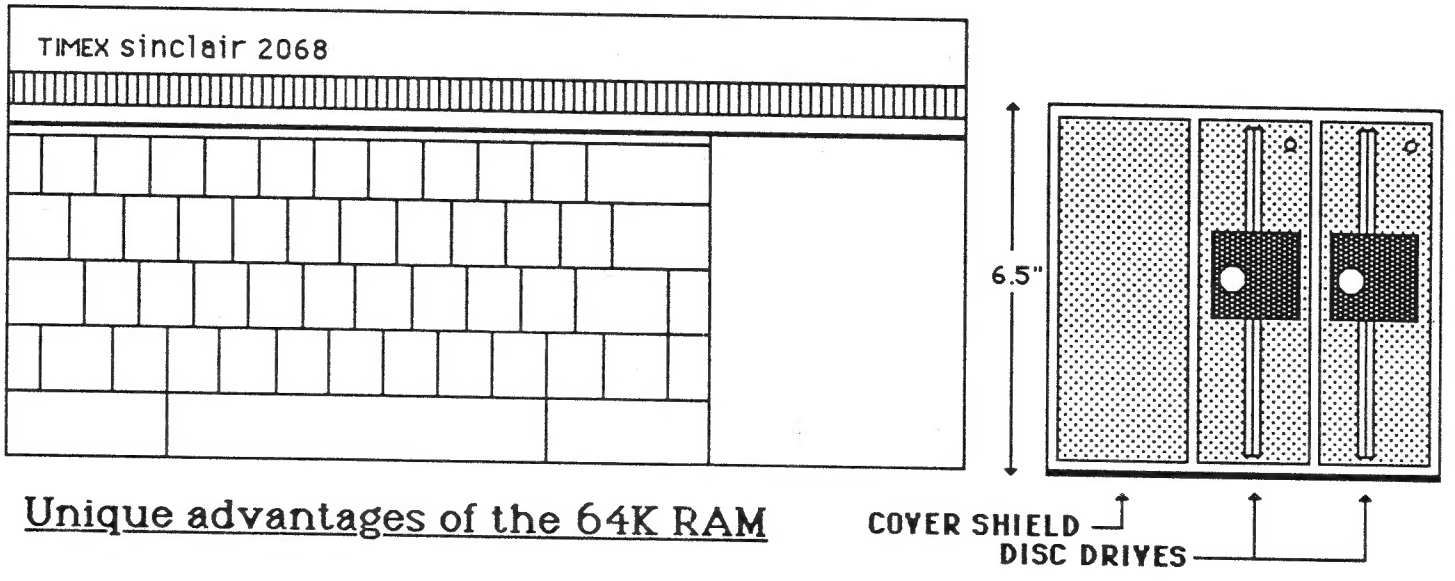

Unique advantages of the 64K RAM

1. Emulate the Spectrum ROM from Disc

2. Run CP/M version 2.2. Access the worlds largest collection of public domain and commercial software.

3. Run a second or much larger program than the original 48K RAM inside the 2068 allows.

HIGH PERFORMANCE FLOPPY DISC INTERFACE for the SINCLAIR - TIMEX COMPUTERS ZX-80, ZX-81, TS-1000, TS-1500

- LOAD A 16K PROGRAM IN 4 SECONDS . . . FIRST TIME, EVERY TIME
- INTERFACES 1-4 FLOPPY DISC DRIVES, ANY SIZE SHUGART COMPAT.
- RIBBON CABLE CONNECTION TO THE COMPUTER FOR TOP RELIABILITY
- USES COMMONLY AVAILABLE SOFT - SECTOR DISKETTES
- $ 179 THOROUGHLY TESTED, 1 YEAR FACTORY WARRANTY

DISC DRIVES SPECIAL DEAL... WHILE THEY LAST

BRAND NEW TOP QUALITY DOUBLE SIDE DOUBLE DENSITY

$99 400 KILOBYTE 2/3 HEIGHT 5 1/4 INCH **$99**

DUAL DRIVE CABINET AND 5 AMP SWITCHING POWER

$ 99 TOP QUALITY HEAVY GUAGE STEEL CREAM COLORED POWERS YOUR COMPUTER TOO

PLEASE SPECIFY 115 V. ☐ 230 V. ☐

ZX81, TS1000, TS1500 ☐ TS2068 ☐

FLOPPY DISC INTERFACE FOR THE TS-2068 $ 199 Includes 64K of RAM and 8K of EPROM, High Quality RGB video output, and the ability to run CPM. (CPM Boot Disc is an additional $ 70, available 2-85) Accomodates 4 drives, any size from 3" to 8", single / double side, single / double density.

If you use your own drives, please specify:

Size _____ Tracks _____ Sides (1 or 2) _____

Track to Track Access time (6 - 30 Ms.) _____

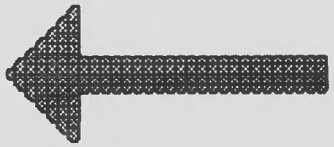

AERCO
ACME ELECTRIC ROBOT CO

Box 18093 Austin, TX 78760

(512) 451-5874

FD-ZX Floppy Disc Interface SPECIFICATIONS

Maximum number of drives 4 **Double Side, Double Density**
Power Requirements +5 Volts at .5 Amps, +12 Volts at 30 Milliamps
I.C. Complement: 17 total including 1797 LSI Floppy Disc Controller, FDC 9216B Data Separator, 2716-1 with control firmware, LS 244 / LS 245 Buffers on ALL computer lines. **Dimensions** 4.5" x 6.5" x .5"
Memory Locations Memory Mapped to any 2K boundary from 2000 - 3000 Hex (8192 - 14336 Dec) Normally supplied at 3000 Hex (12288 Dec) for maximum compatibilty with other peripherals.
Warranty One year **Disc System commands** Read / Write Selected Sector, Read / Write Selected Track, Read / Write Selected Program or Data, Format Disc, Copy Disc (Requires 2 drives)

Shipping Charges	UPS GROUND	UPS 2nd DAY AIR	UPS NEXT DAY AIR	Foreign via Mail
Interface Board	3	5	12	6
1 Disc Drive	6	10	18	11
2 Disc Drives	10	15	22	16
Drive case with Power Supply	4	6	14	8

* Orders over $100 require Cash, Certified Check, M/O
* Certified Check or Money Order ships fastest.
* C.O.D. add $ 3
* Visa and Mastercard add 5%
* Personal checks require 3 weeks to clear.
* Texas residents add 5%

NAME _____

ADDRESS _____

CITY _____ STATE ____ ZIP _____

COUNTRY / SPECIAL INSTR. _____

☐ VISA ☐ M/C _____ EXP _____

QUAN. ____ ITEM _____ PRICE _____

QUAN. ____ ITEM _____ PRICE _____

QUAN. ____ ITEM _____ PRICE _____

QUAN. ____ ITEM _____ PRICE _____

QUAN. ____ ITEM _____ PRICE _____

HIGH PERFORMANCE FLOPPY DISC INTERFACE for the SINCLAIR - TIMEX COMPUTERS ZX-80, ZX-81, TS-1000, TS-1500

- LOAD A 16K PROGRAM IN 4 SECONDS . . . FIRST TIME, EVERY TIME
- INTERFACES 1-4 FLOPPY DISC DRIVES, ANY SIZE SHUGART COMPAT.
- RIBBON CABLE CONNECTION TO THE COMPUTER FOR TOP RELIABILITY
- USES COMMONLY AVAILABLE SOFT - SECTOR DISKETTES
- $ 179 THOROUGHLY TESTED, 1 YEAR FACTORY WARRANTY

DISC DRIVES

We can supply the following drives (subject to current availability) or use your own.

3" HITACHI, very compact and high-tech, flipover,	400 KBytes	$ 235
5.25" TANDON, half height, double density, 1 side,	200 KBytes	149
5.25" EXCELLO, full-height, double density, 2 side,	400 KBytes	189
5.25" SHUGART, full-height, quad density, 2 side,	800 KBYtes	249
5.25" SHUGART, full-height, quad density, 1 side,	400 KBytes	199

POWER PACK Provides regulated +5 and +12 to two drives and powers your computer. Includes dual drive signal ribbon cable. **$ 79**

CABINET Heavy guage steel. Holds 2 full height or 4 half height drives. **$ 35** | **DISKETTES** DSDD Box of 10 **$ 34**

COMPLETE PACKAGE #1	200 KByte	$ 400	1 SSDD Drive, NO CASE
COMPLETE PACKAGE #2	400 KByte	$ 500	1 DSDD Drive with Case
COMPLETE PACKAGE #3	800 KByte	$ 700	2 DSDD Drives with Case

Complete packages include interface board, power pack, cables, and drive(s) as specified above.

If you use your own drives, please specify:

Size _____ Tracks _____ Sides (1 or 2) _____

Track to Track Access time (6 - 30 Ms.) _____

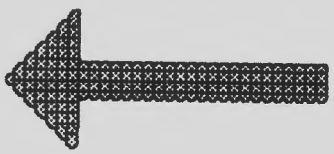

AERCO
ACME ELECTRIC ROBOT CO
Box 18093 Austin, TX 78760
(512) 451-5874

FD-ZX Floppy Disc Interface SPECIFICATIONS

Maximum number of drives 4 **Double Side, Double Density**
Power Requirements +5 Volts at 5 Amps, +12 Volts at 30 Milliamps
I.C. Complement: 17 total including 1797 LSI Floppy Disc Controller, FDC 9216B Data Separator, 2716-1 with control firmware, LS 244 / LS 245 Buffers on ALL computer lines. **Dimensions** 4.5" x 6.5" x .5"
Memory Locations Memory Mapped to any 2K boundary from 2000 - 3000 Hex (8192 - 14336 Dec) Normally supplied at 3000 Hex (12288 Dec) for maximum compatibilty with other peripherals.
Warranty One year **Disc System commands** Read / Write Selected Sector, Read / Write Selected Track, Read / Write Selected Program or Data, Format Disc, Copy Disc (Requires 2 drives)

Shipping Charges	UPS GROUND	UPS 2nd DAY AIR	UPS NEXT DAY AIR	Foreign via Mail
Interface Board	3	5	12	6
1 Disc Drive	6	10	18	11
2 Disc Drives	10	15	22	16
Power Pack	4	6	14	8
Drive Case	4	6	14	8
Package 1	9	14	26	16
Package 2	12	18	30	20
Package 3	15	22	35	25

Certified Check or Money Order ships fastest.

C.O.D. add $ 3

Visa and Mastercard add 5%

Personal checks require 3 weeks to clear.

Texas residents add 5%

NAME _____

ADDRESS _____

CITY _____ STATE ____ ZIP _____

COUNTRY / SPECIAL INSTR. _____

☐ VISA ☐ M/C _____ EXP _____

QUAN. ____ ITEM _____ PRICE _____

QUAN. ____ ITEM _____ PRICE _____

QUAN. ____ ITEM _____ PRICE _____

QUAN. ____ ITEM _____ PRICE _____

QUAN. ____ ITEM _____ PRICE _____

****

CENTRONICS PRINTER INTERFACE
FOR TS 1000, ZX 81
$ 99

* All cables included
* On board EPROM contains ASCII conversion
* Automatically sets RAMTOP, even in 64K system
* Supports LPRINT, LLIST, and COPY commands
* Gold plated edge connectors
* Ribbon cable connection to computer
* Includes male connector for Sinclair device

* *

CENTRONICS PRINTER INTERFACE
FOR TS 2068
$ 69.95

* All cables included
* Printer driver software cassette included
* Supports LPRINT, LLIST, and COPY commands

* *

C. ITOH PROWRITER 8510 AP PRINTER $ 375

* Full width DOT MATRIX printer
* Full graphics capability
* 120 characters per second
* Biderectional printing
* Greek and other character sets built in
* Includes tractor feed and plain paper feed

THIS PAGE PRINTED ON PROWRITER

****

DIRECT VIDEO MODIFICATION FOR TS-1000, 1500

A small circuit board with cable that installs inside the computer and sends clean, sharp video to a standard computer monitor. It does not disable the the normal TV output nor does it invert the video. Requires soldering 3 wires inside the computer. Complete instructions are included. **$ 15 for DV-1 $ 3 S/H**

SHIPPING FREE IF PART OF OTHER ORDER

STD Bus INTERFACE FOR INDUSTRIAL APPLICATIONS

Allows TS computers to function as bus master in STD Bus computer system as commonly used for industrial process control and instrumentation systems. Fully buffers all the computer lines onto the bus and maps the I/O ports into memory space. **$ 3 S/H**

$ 99 including ribbon cable to computer

Dual RS-232 serial interface for ALL models of the T/S computers

Completely independent channels can be configured for separate Baud rates and communications parameters. **$ 89**

Floppy disc interface for the TS-2068

1 - 4 Shugart compatible drives of any size, double side, double density. Complete system packages available. **$ 199**

CPM® for the TS-2068

The worlds largest collection of business / scientific software. Requires AERCO disc system. **$ 80**

Did you know ?

That floating point arithmetic runs about twice as fast on the T/S machines than on an Apple II.®

AERCO
ACME ELECTRIC ROBOT CO

Box 18093 Austin, TX 78760

(512) 451-5874